PO:

RESTORATION HARDWARE

Topanga Natural Gas Fire Table Owner's Manual
Tall Rectangle Style # 42100144

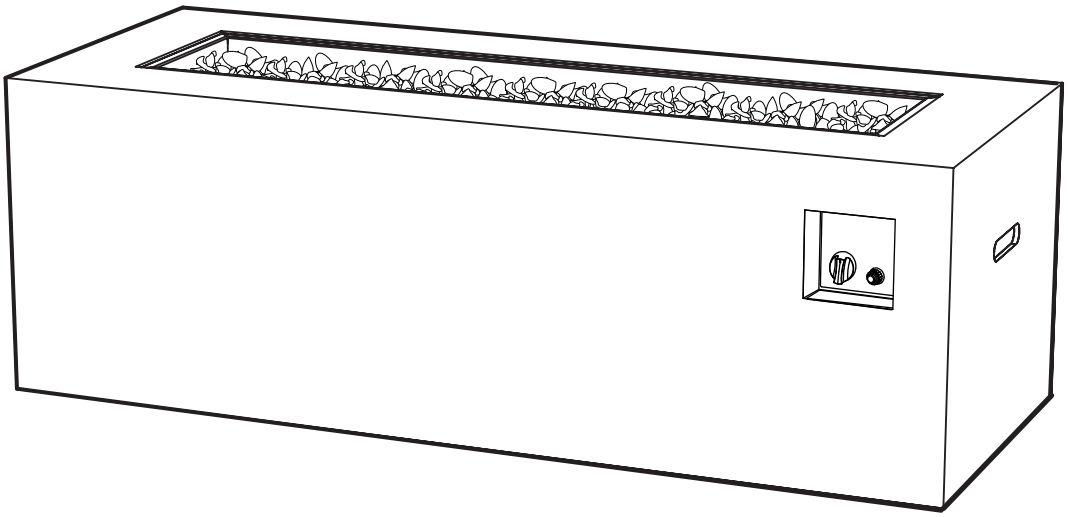

For Technical Support call
1-800-654-1704

realflame®

⚠Warning

For outdoor use only
DO NOT use for cooking
DO NOT use under any overhead enclosure

Note

A Natural Gas line with a 1/2" connection is required to install this unit.

US

Designed and Engineered by Real Flame. Manufactured as Model # 11506NG

⚠WARNING

- ⚠ If the information in this manual is not followed exactly, a fire or explosion may result causing property damage, personal injury or loss of life.
- ⚠ Installation and service must be performed by a qualified installer, service agency or gas supplier.
- ⚠ Improper installation, adjustment, alteration, service or maintenance can cause injury or property damage.
- ⚠ Read the installation, operation and maintenance instructions thoroughly before installing or servicing this equipment.
- ⚠ Save these instructions for future reference. If you are assembling this unit for someone else, give this manual to him or her to read and save for future reference.

⚠ DANGER

If you smell gas:
1. Shut off the gas to the appliance.
2. Extinguish any open flame.
3. If odor continues, keep away from the appliance and immediately call your gas supplier or fire department.

⚠ WARNING

Do not store or use gasoline or other flammable vapors and liquids in the vicinity of this or any other appliance.

This unit is not for use with propane. Use only with Natural Gas.

Table of Contents

Important Safety Information	3
Natural Gas Warnings	5
Parts List and Descriptions	7
Base Assembly Instructions	8
Pre-Use Instructions	9
Assembly Instructions	10
Connecting to Natural Gas Source	11
Lighting	13
Care and Cleaning	14
Gas Component Connection Checks	15
Troubleshooting	17

⚠ DANGER

CARBON MONOXIDE HAZARD

This appliance can produce carbon monoxide which has no odor.

Using it in an enclosed space can kill you.

Never use this appliance in an enclosed space such as a camper, tent,car or home.

SPECIFICATIONS

Product Name
Topanga Chat Height Table

Model No.
11506NG

Rated Heat Output
75,000 btu/hr

Type of Gas
Natural Gas (NG)

Gas Supply
Quick Connect to Gas Line

Important Safety Information

WARNING FIRE TABLE IS FOR OUTDOOR USE ONLY

- **WARNING** Failure to follow the dangers, warning and cautions in this manual may result in serious bodily injury or death, or in a fire or an explosion causing damage to property.
- **WARNING** Improper installation, adjustment, alteration, service or maintenance can cause injury or property damage. Read the installation,operating and maintenance instructions thoroughly before installing or servicing this equipment.
- **NOTE** When an appliance is for connection to a fixed piping system, the installation must conform with local codes, or in the absence of local codes with the National Fuel Gas Code, ANSI Z223.1/NFPA 54; National Fuel Gas Code, Natural Gas and Propane Installation Code, CSA B149.1; or Propane Storage and Handling Code, B149.2, as applicable.
- **Minimum Clearence from Unit to Combustible Materials**
  48" (121.9 cm) from all sides and back. Do not locate this firetable under any overhead enclosure.

IF YOU SMELL GAS

- Shut off gas supply to the fire table.
- Extinguish any open flame.
- Do not try lighting any appliance.
- Do not touch any electrical switch; do not use any phone in your building.
- Immediately call your gas supplier from a neighbor's phone.
- Follow the gas supplier's instructions.
- If you cannot reach your gas supplier, call the fire department.

- Children and adults should be alerted to the hazards of high surface temperatures and be kept at a safe distance while fire table is in use.
- This outdoor fire table is NOT to be operated by children. Young children should be closely supervised when in the vicinity of this outdoor fire table.
- Do not hang or place clothing or other flammable materials on or near the gas fire table.
- Any guard or protective device removed for servicing the appliance shall be replaced prior to operating the appliance.
- Installation and repair should be done by a qualified service person. The appliance should be inspected before use and at least annually by a qualified service person. More frequent cleaning may be required as necessary. It is imperative that the control compartment, burners, and circulating air passageways of the appliance are kept clean.
- Keep these instructions for future reference. If you are assembling this unit for someone else, give this manual to him or her to read and keep for future reference.
- Do not use this unit for cooking.
- Do not pour water into the firetable.
- DO not use this outdoor fire table if any part has been under water. Immediately call a qualified service technician to inspect the fire table and to replace any part or control system and any gas control which has been under water.
- This gas fire table and its individual shutoff valve must be disconnected from the gas supply piping system during any pressure testing of that system at test pressures in excess of 1/2 of psi (3.5 kPa). The appliance must be isolated from the gas supply piping system by closing its individual manual shutoff valve during any pressure testing of the gas supply piping system at test pressures equal to or less than 1/2 psi (3.5 kPa).

- This gas fire table must be used ONLY outdoors in a well-ventilated space and shall NOT be used inside a building, garage, or any other enclosed area.
- DO NOT use this outdoor gas fire table for indoor heating. TOXIC carbon monoxide fumes can accumulate and cause asphyxiation.
- NEVER LEAVE this gas fire table unattended when in use.
- Do not store or use gasoline or other flammable vapors and liquids within 25 feet (7.62m) of this or any other appliance.
- Do not store any combustible materials in the base enclosure.
- Never use a flame to check for gas leaks.
- The use of alcohol, prescription or non-prescription drugs may impair an individual's ability to properly assemble or safely operate this outdoor fire table.
- DO NOT use in an explosive atmosphere. Keep gas fire table area clear and free from combustible materials, gasoline and other flammable vapors and liquids.
- This outdoor fire table is not to be installed or used in or on recreation vehicles and/or boats.
- Always use in accordance with all applicable local, state and national codes. Contact your local fire department for details on outdoor burning.
- Use the same precautions you would with any open fire when using this outdoor fire table.
- DO NOT burn solid fuels such as: wood, charcoal briquettes, lump charcoal, manufactured logs, driftwood, trash, leaves, paper, cardboard, plywood, painted or stained or pressure treated wood in this outdoor fire table.
- DO NOT use this outdoor fire table until it is COMPLETELY assembled and all parts are securely fastened and tightened.
- DO NOT store another LP gas tank within 10 feet (3.05 m) of this outdoor fire table while it is in operation.
- DO NOT use this outdoor fire table near automobiles, trucks, vans or recreational vehicles.
- DO NOT use this outdoor fire table under any overhead structure or near any unprotected combustible constructions. Avoid using near or under overhanging trees and shrubs.
- Always use this outdoor fire table on a hard, level non-combustible surface such a concrete, rock or stone. An asphalt or blacktop surface may not be acceptable for this purpose.
- DO NOT wear flammable or loose clothing when operating this outdoor fire table.
- DO NOT use in windy conditions.
- Keep all electrical cords away from a hot outdoor fire table.
- Certain areas of this outdoor fire table when in use will become too hot to touch. Do not touch hot surfaces until the unit has cooled unless you are wearing protective gear such as insulated pot holders or heat resistant gloves or mittens to avoid burns.
- DO NOT attempt to move or store this outdoor fire table until all parts are cool.
- DO NOT lean over this outdoor fire table when lighting or when in use.
- DO NOT sit on the fire table when the unit is in operation.
- DO NOT throw anything onto the fire when the unit is in operation.
- Lava rocks are very hot; please keep children or pets at a safe distance.
- It is essential to keep the outdoor fire table valve compartment, burners, and circulating air passages clean. Inspect outdoor fire table before each use.

Important Safety Information (Continued)

- Prior to each fire table operation, check the hose for evidence of excessive abrasion or wear. Use a handheld mirror to see hose sections located under the unit. to If the hose is damaged, cracked or cut, it must be replaced before using the gas fire table. The hose assembly can only be replaced with a hose assembly specified by the manufacturer. Please call Real Flame at 1-800-654-1704.
- Before each use, examine the burner and its components. If dirty, clean with a soft brush and soapy water solution. Also examine the area around the burner. Any dirt or foreign material, such as spider webs or nests in this area should be removed. If it is evident that the burner is damaged, the fire table must not be used. The burner assembly must be replaced. Please contact Real Flame at 1-800-654-1704 for technical support.
- Place the hose out of the pathways where people may trip over it. Do not place the hose in areas where it may be subjected to accidental damage.

⚠ DANGER

This outdoor fire table is for use with natural gas (NG) only. The conversion to or attempted use of liquefied petroleum (LP) in this outdoor fire table is dangerous and could result in serious personal injury, or property damage.

ATTENTION: Any alteration of the outdoor fire table that is not specifically directed in the operations manual will void manufacturer warranty.

Natural Gas Dangers And Warnings

Natural Gas is flammable and hazardous if handled improperly. Become aware of the characteristics before using any natural gas product.

Natural Gas Characteristics

- Flammable, explosive under pressure, lighter than air and settles in pools in high areas.
- In its natural state, Natural Gas has no odor. For your safety, an odorant has been added.
- Contact with Natural Gas could burn the skin.
- Natural Gas is extremely flammable and hazardous if handled improperly.

Chemicals known to the state of California to cause cancer, birth defects, or other reproductive harm are created by the combustion of Natural Gas.

Your Natural Gas fire pit is designed to operate on Natural Gas only, at a pressure of seven inches water column (7″ W.C.) Check with your gas utility for local gas pressure, because in some areas Natural Gas pressure varies. Also, check with your gas company or with local building codes for instructions to install gas supply line, or call a licensed and qualified installer.

It is recommended that an ON/OFF manual shut-off valve be installed at the gas supply source, outdoors: after the gas line exits outside wall and before quick disconnect or before gas supply line enters ground, indoors: in the branch gas line in an accessible location near the gas supply line.

Pipe sealing compound or pipe thread tape of the type resistant to the action of Natural Gas must be used on all male pipe threads. Apply compound or tape to at least the first three to four threads when making a connection.

Never store or use gasoline or other volatile substance in the vicinity of this fire table.

Natural Gas Connection

Connect a manual shutoff valve to gas supply line. Apply sealing compound or pipe thread tape of the type resistant to the action of the Natural Gas on all male pipe threads. Connect the end with the quick release connector of Natural Gas hose to manual shut-off valve at the gas supply.

⚠ Caution:
During any high pressure testing of the gas supply piping system at test pressures in excess of 1/2 psi (3.5 kPa), the appliance and it's individual shutoff valve must be disconnected from the gas supply piping system.

The outdoor fire table must be isolated from the gas supply piping system by closing the individual manual shutoff valve during any pressure testing of the gas supply piping system at least equal to or less than 1/2 psi (3.5 kPa).

⚠ Warning:
Burner valves are pre-tested at the factory to operate on Natural Gas. Do not attempt to convert or change.

Parts List

①	Fire Table	LMST - 115064777G WSLT - 115064377G	1
②	Feet	115010003	1 set
③	Lava Rock	05603408	4 boxes
④	AA Battery	N/A	1

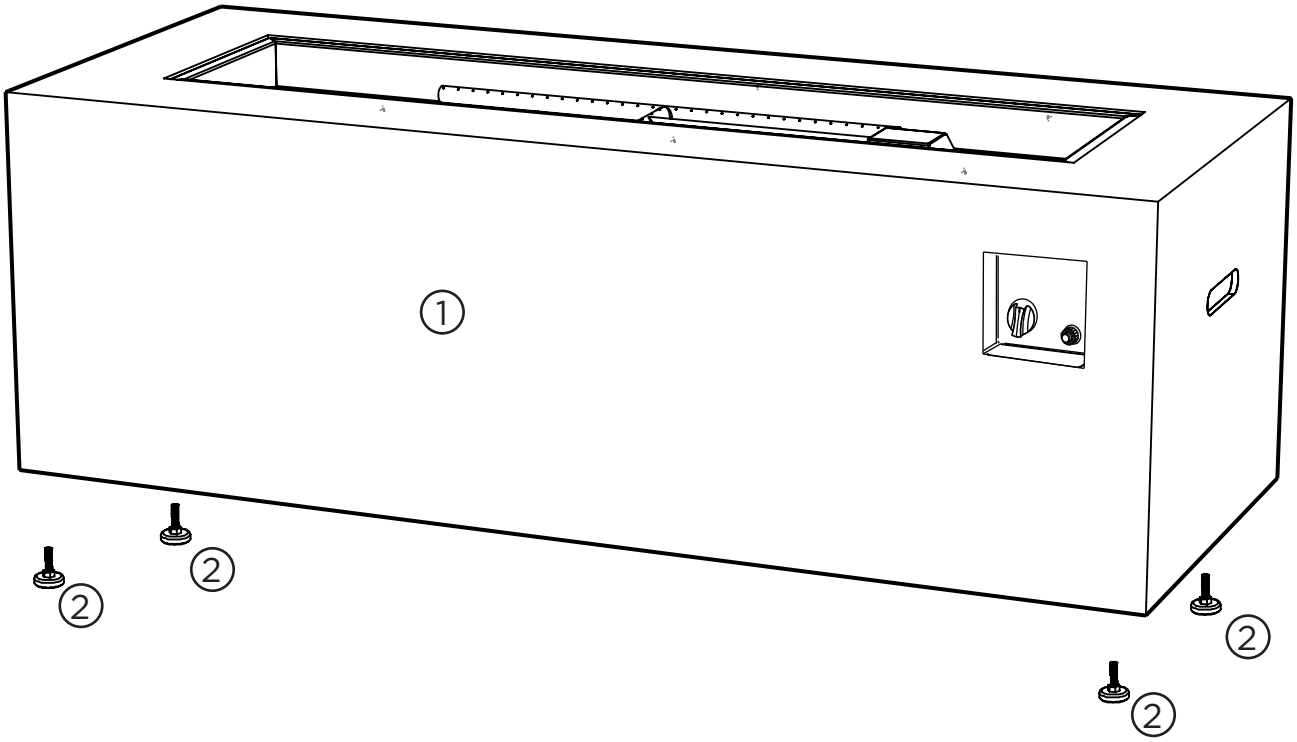

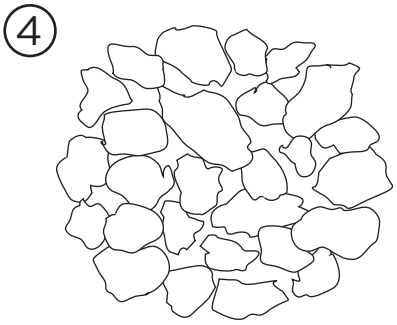

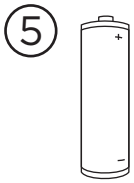

Assembly Instructions

1.) Install the AA battery as shown in the diagram below.

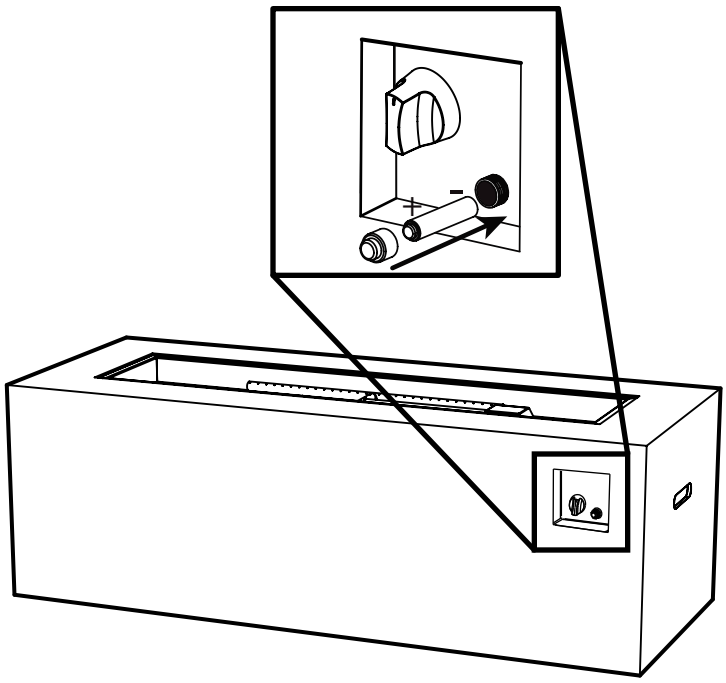

2.) Connecting your fire table to the Natural Gas Source:
A professionally installed shut-off valve between the supply piping and the socket is recomended by the National Fuel Gase Code. Socket connection must be made outdoors. The diagram below shows the main components of a standard Natural Gas system.
This unit requires a 1/2" thread for the hook-up.

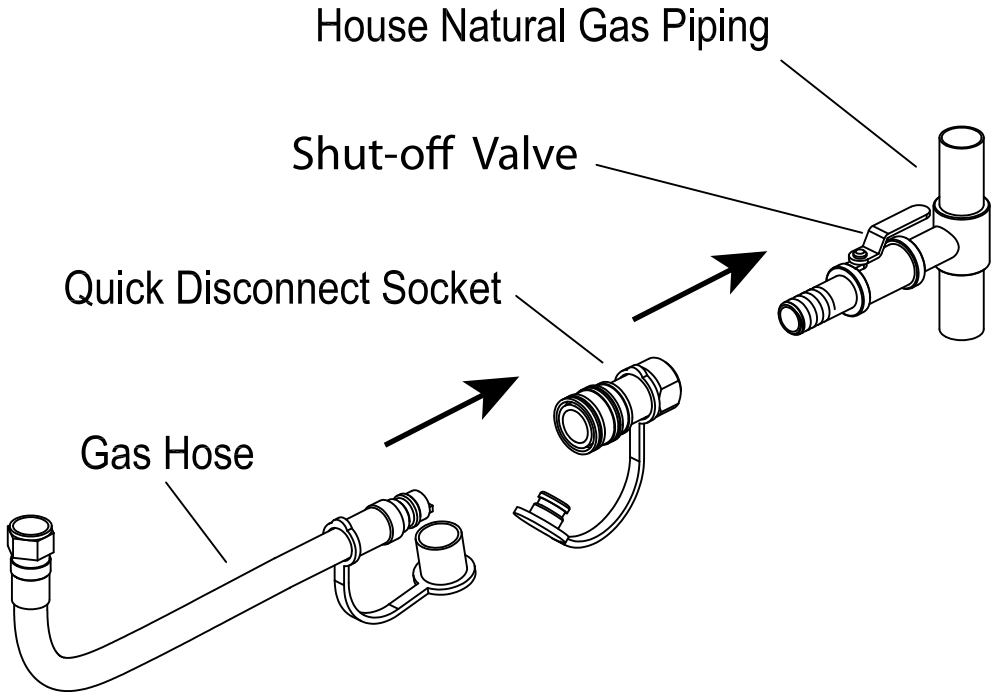

3.) Connecting the Socket

Coat the gas supply pipe nipple with gas resistant pipe compound or approved teflon tape. Screw socket onto gas supply pipe (house gas source) as shown to the right, and wrench tighten.

The quick disconnect socket should never be connected to the fire table. Direction of gas flow is indicated on the socket.

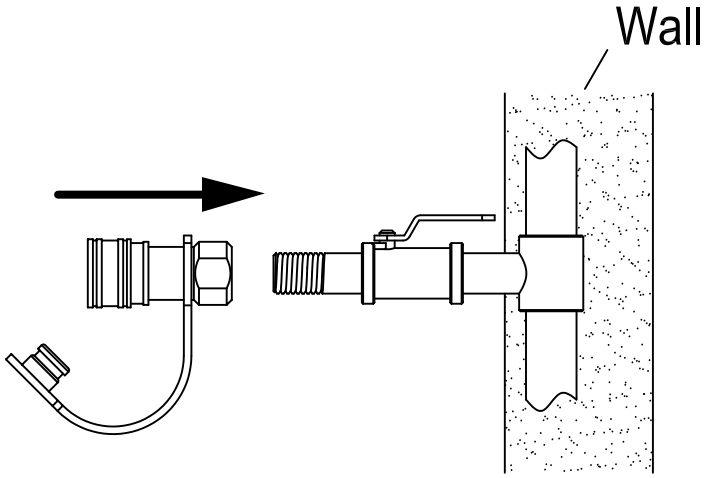

4.) Using the Quick Connect Socket

Pull back the sleeve on the quick disconnect socket and insert the unattached end of the gas hose into the socket. Release the sleeve and continue pushing the hose into the socket until the sleeve snaps into the locked position.

After making all connections, perform a leak test as described on page 11 of this manual.

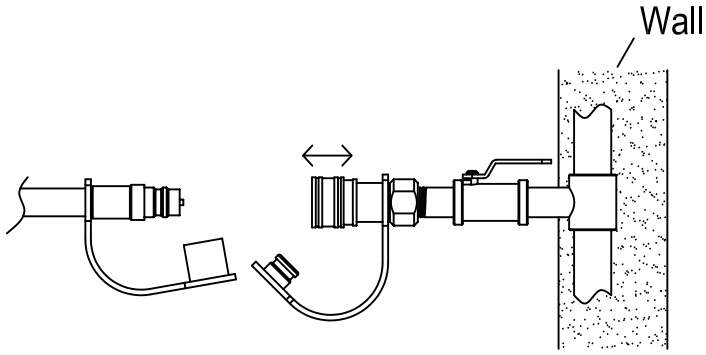

5.) Place lava rock by hand. DO NOT dump bag out into tray to avoid clogging the burner with dust. Position the lava rock across the bowl to a level about 1" above the top of the burner. Make sure that you do not block the igniter box with lava rock to ensure proper ignition.

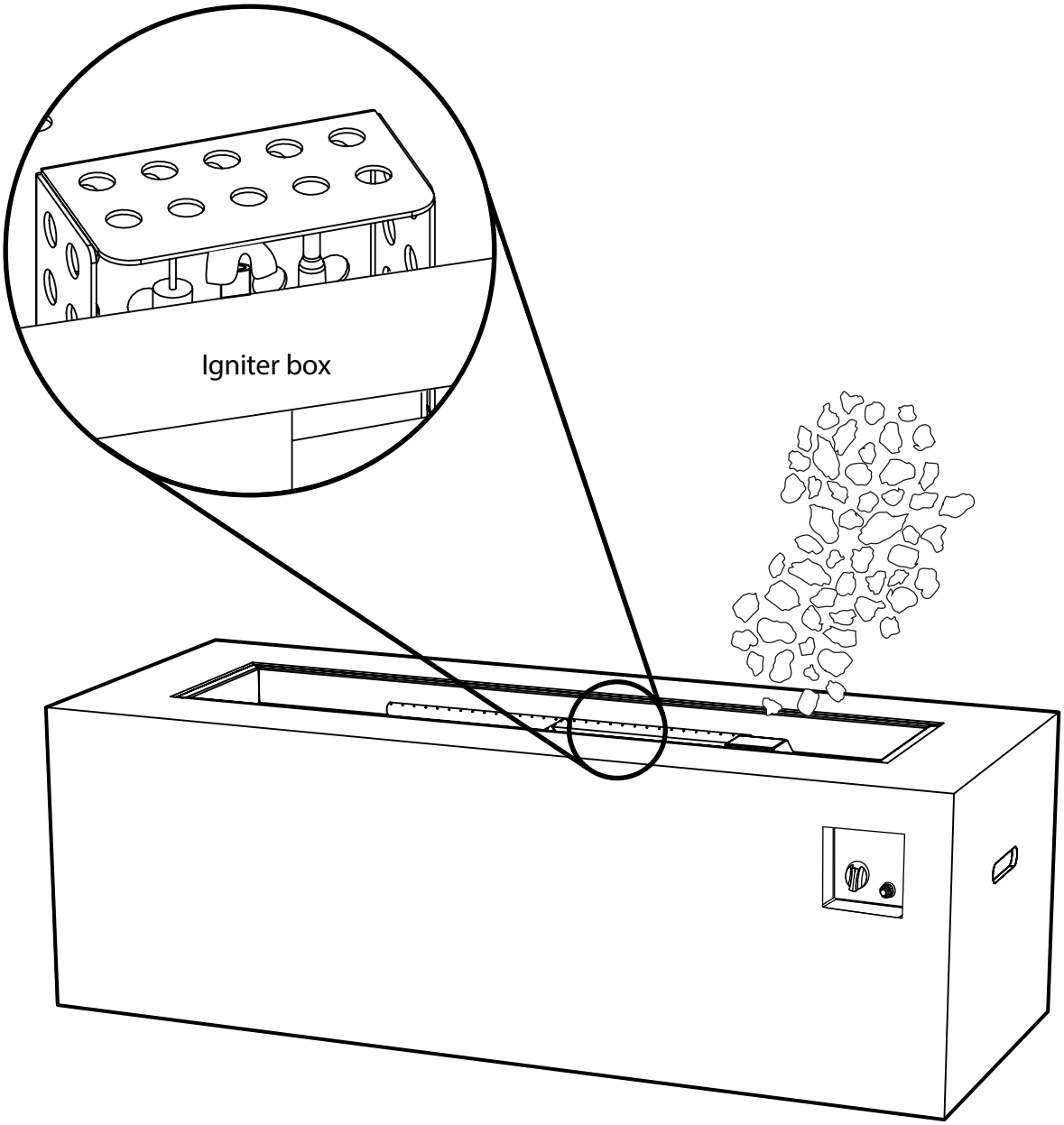

Lava Rock Warning:

1. Do not light or use this firetable if lava rocks are wet. Ensure lava rocks are completely dry before lighting. Intense heat can cause wet lava rocks to explode and they could hit someone causing injury.
2. Please keep away from the firetable for at least 20 minutes during initial start-up as lava rocks could retain some moisture from manufacturing and shipping.

Pre-Use Instructions

⚠ WARNING Before using this outdoor fire table, make sure you have read, understand and are following all information provided in the important Safety Information section of this manual. Failure to follow those instructions can cause death, serious injury or property damage.

Prior to each gas fire table operation, check the hose and valve for evidence of excessive abrasion or wear.

CHECKING FOR LEAKS

Make a leak check solution by mixing 1 part dishwashing soap with 3 parts water in a spray bottle.

Make sure control knob is "OFF." Then, turn Natural Gas on at its source.

Spray leak solution on valve connections paying particular attention to the areas indicated by arrows.

If any bubbles appear turn Natural Gas off, reconnect and re-test. If you continue to see bubbles after several attempts, disconnect Natural Gas source and contact Real Flame® at 1-800-654-1704 for assistance.

If no bubbles appear after one minute turn source OFF, wipe away solution and proceed.

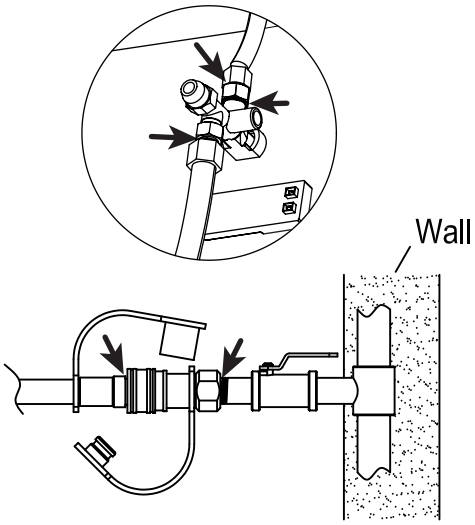

Check for leaks at these locations

Lighting Instructions

Using the Igniter

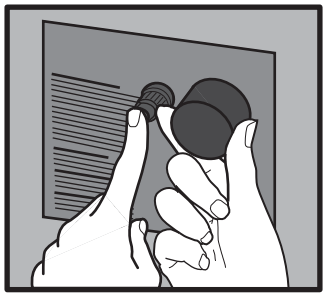

1. Read and understand all operating instructions before lighting.
2. Burner control knob must be in the “OFF” position.
3. Connect Natural Gas source (see above pages).
4. Open the Natural Gas supply to the unit.
5. Push and hold igniter button to create sparks.
6. While holding the igniter button with one hand, use your other hand to push and turn the control knob to the “LIGHT” position to light the burner.
7. Keep Burner Control Knob pressed in for 15-30 seconds after ignition.
8. If ignition does not occur in 30 seconds, turn control knob to the “Off ” position and turn gas off at the source, wait 5 minutes until gas has cleared and repeat lighting procedure.
9. After lighting, rotate the Burner Control Knob counter clockwise to “Low” setting. Observe flame, make sure all burner ports are lit. Flame height should be no higher than 13 inches tall.
10. Adjust the flame to the desired height with the control knob .

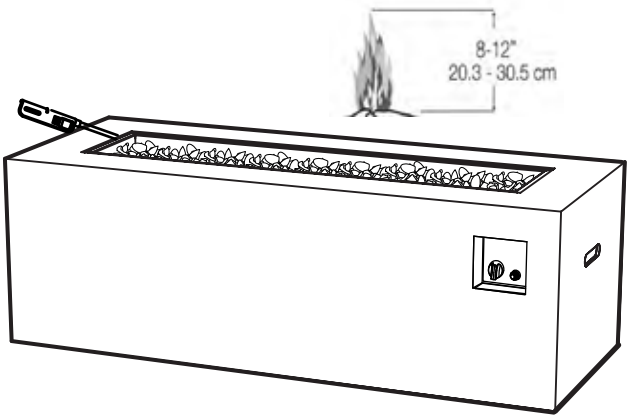

Using a Long Match or Lighter

1. Prior to lighting, use a shovel to move the lava rocks for access to the burner.
2. Wearing heat resistant gloves, position the burning long match or burning butane lighter near the side of the burner. DO NOT lean over the firetable while lighting!
3. Turn control knob counter clockwise to “LIGHT”.
4. Remove long match/long butane lighter.
5. After lighting, use a shovel and heat resistant gloves to carefully move the lava rocks back into their proper position.
6. After lighting, rotate the Burner Control Knob counter clockwise to “Low” setting. Observe flame, make sure all burner ports are lit. Flame height should be no higher than 13 inches tall.
7. Adjust the flame to the desired height with the control knob.

⚠ WARNING
When using this method to light your fire table use heat resistant gloves and follow the step by step instructions. Failure to do so could result in severe injury.

⚠ WARNING
Do not wear loose or flammable clothing while lighting fire table.

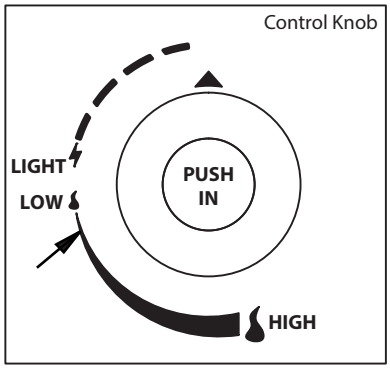

⚠ WARNING
If burner flame goes out during operation, immediately turn the control knob “OFF” and let the gas clear a minimum of 5 minutes before attempting to re-light the fire table.

Please refer to the trouble shooting pages for additional support, beginning on page 16.

Care and Cleaning

Inspecting

This outdoor fire table must be inspected regularly to ensure that the product is safe to use and to extend product life.

WARNING DO NOT inspect this outdoor fireplace until the fire is COMPLETELY out.

1. Make sure all parts are securly fastned in place. If a part moves when touched, check its connection points to see if they are lose.
2. Check all gas connections for leaks.
3. Check ignition system to insure proper sparking.
4. Check components for any signs of damage, rust or excessive wear.
5. If damage to any component is detected, DO NOT operate until the proper repairs have been made.

WARNING DO NOT tamper with this appliance. This is DANGEROUS and will void the warranty. Any part found be faulty must be replace with an approved part, confirmed by the manufacturer. For technical support contact Real Flame at: 1-800-654-1704.

General Care and Cleaning

1. This outdoor fire table should be cleaned regularly to ensure safe use and extend product life.
   NOTE: After repeated use, a slight discoloration of the finishes may occur.

WARNING DO NOT attempt to clean this outdoor fireplace unless the fire is completely out and the unit is cool to the touch.

DO NOT use oven cleaner or abrasive cleaners as they will damage this product.

DO NOT USE SOLVENTS while in closed spaces or while smoking.

Table

1. Wipe exterior surfaces with a mild dishwashing soap, then rinse clean with water.

Storage:

WARNING DO NOT move or store this fire table unless the fire is COMPLETELY out and is cool to the touch.

1. Turn gas OFF at tank connection. Remove tank and store in a cool, dry location outdoors, away from children.
2. Carefully remove rock filler and store components flat to protect them from breakage.
3. ALWAYS cover your outdoor fire table when not in use. The cover will protect the mechanical components from dirt and debris, prevent water from pooling on the surface of the fiber cast concrete and will prevent fading and discoloration of the finish.
4. Store in a cool, dry location away from children and pets.

Gas Component Connection Checks

If the burner will not light or stay lit, please perform the following checks.

1. Make sure the electrode wire is correctly and completely connected.

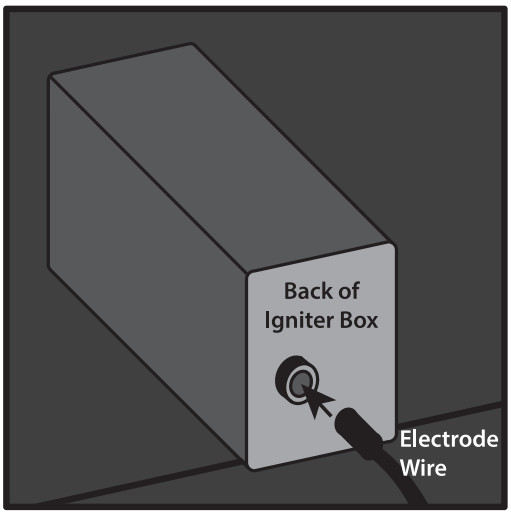

2. Make sure that the igniter box is unobstructed.

Clear any debris on top of the igniter box and make sure there is no debris between the igniter pin, thermocouple and the burner tube.

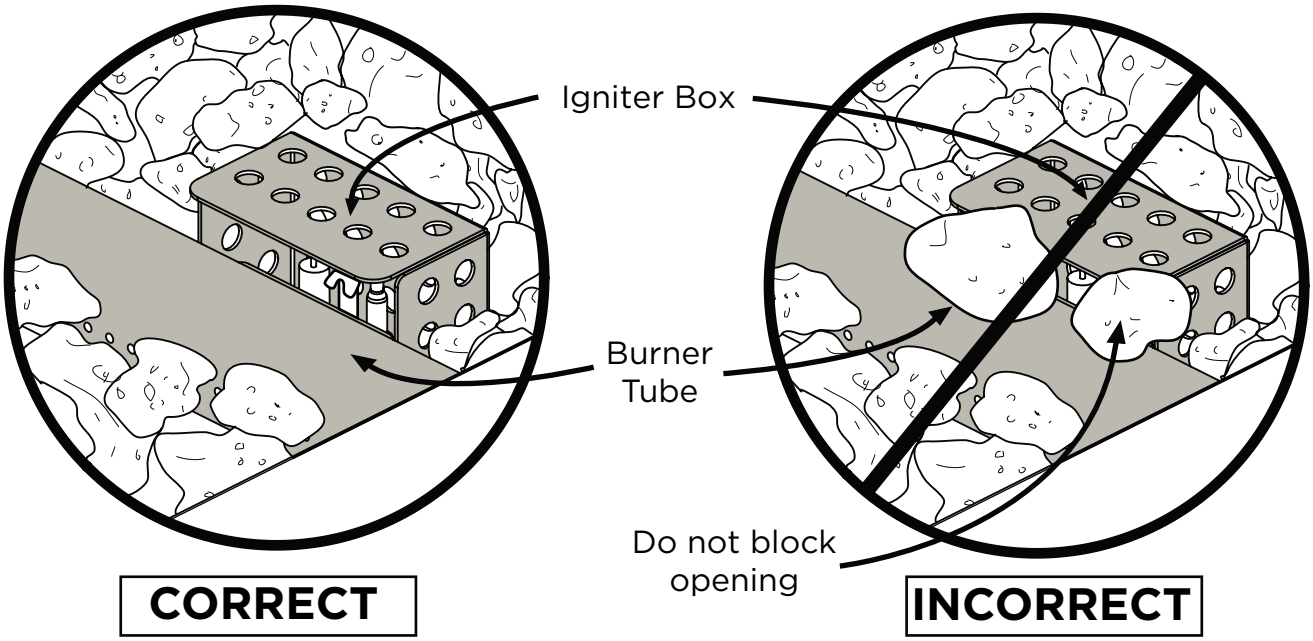

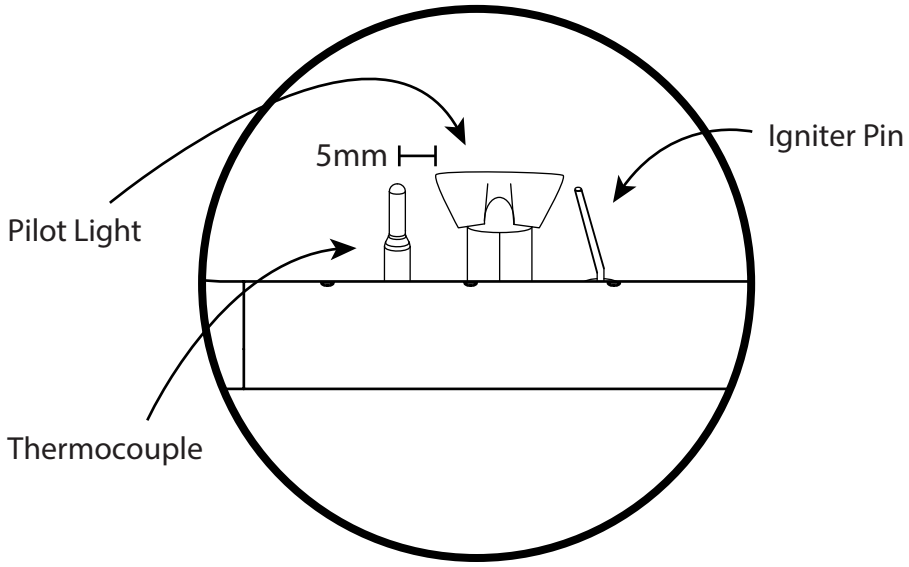

3. Make sure that the igniter pin and thermocouple are correctly positioned.
 - The igniter pin should be pointed straight to the thermocouple.
 - The thermocouple should be positioned 5mm away from the pilot light.

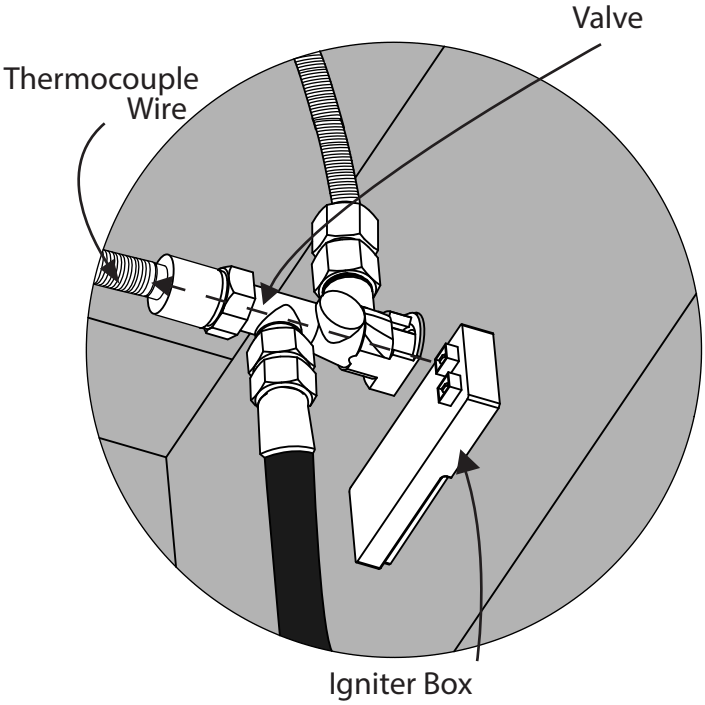

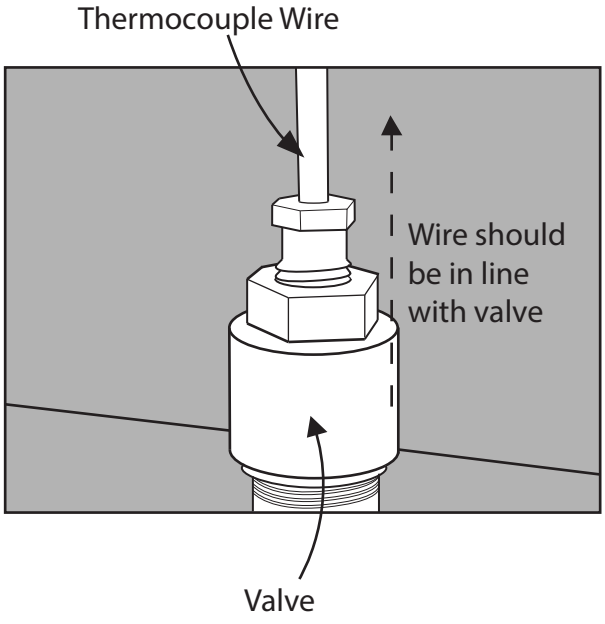

4. Make sure that the thermocouple wire is correctly positioned. The thermocouple wire should be in line with the valve.

Troubleshooting

Problem: Burner will not light using igniter

Possible Cause 1: Electrode and burners are wet.

-Wipe dry with cloth.

Possible Cause 2: Igniter battery is dead.

-Check or replace the AAA battery in the igniter.

Possible Cause 3: Igniter Pin cracked or broken - sparks at crack.

-Call Real Flame at 1-800-654-1704 for technical support.

Possible Cause 4: Wire loose or disconnected.

-Reference page 15, step 1, reconnect wire. Call Real Flame at 1-800-654-1704.

Possible Cause 5: Wire is shorting (sparking) between igniter and electrode.

-Call Real Flame at 1-800-654-1704 for support.

Possible Cause 6: Igniter Pin not pointing at thermocouple.

-Reference page 16, turn electrode to point at the thermocouple.

Possible Cause 7: Bad Igniter

-Call Real Flame at 1-800-654-1704 for support.

Problem: Burner will not light with match

Possible Cause 1: No Gas Flow.

-Check if Natural Gas supply is stopped. If it is not stopped, refer to "Problem: Sudden drop in gas flow" on the following page.

Possible Cause 2: Quick Connect not fully engaged.

-Disconnect the quick connect at the gas supply and reconnect to ensure a proper connection is made.

Possible Cause 3: Obstruction of gas flow.

- Check for bent or kinked hose.

Possible Cause 4: Spider webs or insect nest in the venturi.

- Clean the venturi.

Possible Cause 5: Burner ports clogged or blocked.

-Reference "Problem: Irregular flame pattern" on the following page. Clean the burner ports as described there.

Problem: The fire table emits a lot of black smoke when in use

Possible Cause 1: Hose from gas fire table is pinched.

-Make sure the hose is not pinched between the fire table and the source of the gas.

Possible Cause 2: Flame is being obstructed at burner ports.

-Make sure that the gas ports on the burner are free of any lava rocks so that the flame can flow naturally.

For Technical Support Contact Real Flame at: 1-800-654-1704

Troubleshooting

Problem: Sudden drop in gas flow, or a reduced flame height

Possible Cause 1: Out of Gas.

-Call your local gas company.

Possible Cause 2: Excess flow safety device may have been activated.

-Turn control knob to “OFF”, wait 30 seconds and light outdoor fire table. If flames are still too low reset the excessive flow safety device by turning off the control knob and the gas supply. Disconnect the quick disconnect socket.Turn Burner Control Knob to “HIGH”. Wait 1 minute. Turn Burner Control Knob off. Reconnect the quick disconnect socket, turn on the main gas supply and perform a leak check at the Natural Gas connection.

Problem: Irregular flame pattern, flame does not run the full length of the burner

Possible Cause: Burner ports are clogged or blocked.

-Clean burner ports. Do this by inserting a paperclip into each of the burner ports to ensure they are not clogged. WARNING: Make sure burner is not on, and has had sufficient time to cool before touching it.

Problem: Flame blow out

Possible Cause 1: High or gusting winds.

-Increase flame to “HIGH” setting.

Possible Cause 2: Low on Natural gas.

-Call your local gas company.

Possible Cause 3: Excess flow valve tripped.

-Refer to “Problem: Sudden drop in gas flow”

If these trouble shooting steps are unable to resolve the problem, please call the numbers listed below.

For Technical Support Contact Real Flame at: 1-800-654-1704

Warranty & Return Policies

Warranty
Real Flame® Company warrants Real Flame gas fireplaces and accessories to be free from defects in parts under normal use and service for a period of 2 years from the date of purchase and defective from finish issues for a period of 5 years from the date of purchase. In the event of such defects Real Flame will, at its option, replace the defective product or refund the purchase price. The foregoing is the exclusive remedy and Real Flame disclaims all other warranties, including any implied warranty of merchantability or fitness for a particular purpose. In addition, Real Flame will not be responsible for consequential damages in excess of the purchase price of the product on which such liability is based.

Return Policy
You may return your purchase within 90 days of receipt. No refunds will be issued for incomplete or unauthorized returns. All returned products must be 100% complete, adequately packaged in original packaging and in resalable condition. Products that have been assembled or modified will not be eligible for return. All items must be returned in their entirety, meaning all items included must be returned together. No returns or exchanges on discontinued items. Please begin the return process by contacting the store or company where you bought your Real Flame item.

Replacement Parts
In the event that an item has been lost or damaged, either by the manufacturer or in shipping, you may request a replacement. Replacement parts are not available for all units and only given at Real Flame's discretion. We will assess any damage and find a solution, which could include shipping you a replacement. No replacements are available for discontinued items or repackaged (open box) products. Please call Real Flame Customer Service at 800-654-1704 for replacement parts before returning the damaged item. Please have the following information (which can be found in your instruction manual) ready before you call Customer Service.

- Model Number of Item
- 4-8 digit Part Number
- Lot Code Number
- Shipping Address
- A picture of the damaged item may be requested. Pictures should be sent to custserv@realflame.com

Incorrect Order Received
If you received something other than what you ordered, please contact Real Flame Customer Service at 800-654-1704 within 48 hours of receiving the item.

Please refer to www.Realflame.com for our complete return guidelines and policies.

Real Flame®
7800 Northwestern Ave.
Racine, WI 53406

Customer Service: 1-800-654-1704 in USA
Service à la clientèle: 1-800-363-6443 in Canada
custserv@realflame.com